F SERIES I VANTAGE

Where production meets precision

IMAGINATION,
SHARPENED

summa

The reality shaping modern production

Your work is changing.

Runs are shorter. Designs more intricate. Jobs switch faster than teams can keep up. Every day brings a little more pressure to deliver more, with less time and fewer hands to do it. Material costs rise, labor is tight, and one mis-cut can erase the profit on an entire job. When pricing cannot move, productivity has to.

Faster cutting, faster drives and faster movements on its own don't answer that pressure on real production floors. What matters is creating an end-to-end workflow that actually flows: setup, calibration, mounting, tool recognition, job identification, the small moments that add up in the end..

Getting it right? That's where the money's at.

Performance today is defined by how fast and failproof your entire workflow is.

And that's where the story of our new **F Series Vantage** begins. For years, Summa has been known for precision and reliability. We never took that for granted, working together closely with customers and partners to understand their biggest challenges, to see what businesses need to thrive in the industry of today.

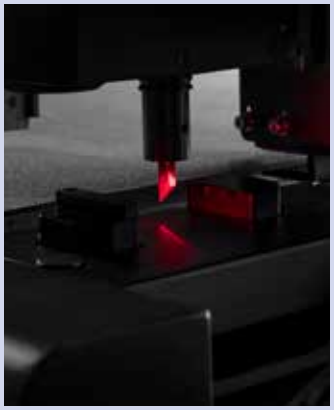

The F Series Vantage is our answer to that question.

We built the platform around real life production challenges. Around the operator who needs a machine that works with them, intuitively understanding his next best move. Around workflows that demand speed not just at the head, but at every point from startup to changeover. Around open integration, because every business should be free to create their own ideal ecosystem.

The F Series Vantage is not an upgrade. It's a new chapter in how finishing should feel.

IMAGINATION, SHARPENED

Faster across the entire workflow

Every job runs smoother when each step of the workflow – from the first startup until the final cut – moves without hesitation. The F Series Vantage was engineered to remove the small delays that slow production down, providing Summa customers with a 40% productivity gains.

Startup

- The machine finds its zero point through a smart sensor that cuts homing time. In the case of a safety interruption, the system quickly returns to “ready”, keeping your operator safe without hurting productivity.

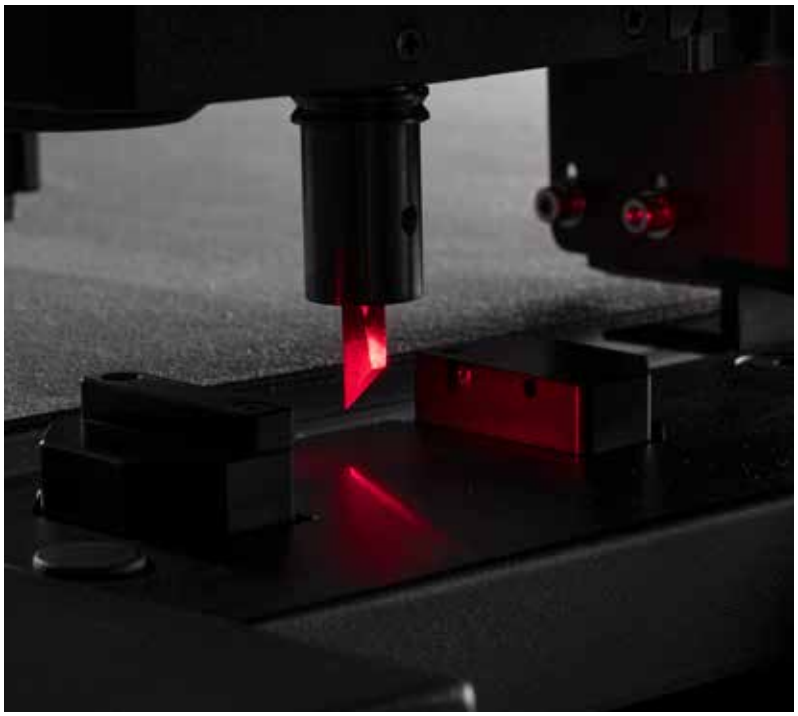

ADC

- Automatic device calibration and blade recognition removes manual tool setup: blade origin, alignment, and depth are checked and corrected in seconds, saving you minutes of manual labor on every job.

Media thickness sensor

- The optical media thickness sensor measures material height without touching it, saving time and preventing extra passes by lifting the tool as little as needed.

Automatic Tool Recognition

- The triplehead with automatic module recognition keeps the most-used tools on board, eliminating most tool swaps and speeding up necessary swaps.

Tooling

- The rigid material cutout tool handles the majority of daily materials — including Foam PVC up to 8 mm — reducing changeovers even further.
- For finer details, the high precision cutout tool is ideal, handling flexible materials and rigid materials up to 6mm thick.

Job initiation

- The machine reads the barcode through a fast ethernet connected camera and automatically loads the correct file, material profile, and tool settings.
- Unified GoProduce software puts every step of the job in one place; no more program switching.

During the job

- New motors, refined firmware, and redefined motion control deliver consistently faster movements with no wasted lifts, resulting in +40% productivity gains.
- The fast module speeds up Z movement, saving time on intricate jobs and high detail cuts.
- Tandem workflows start with a single button-click.

Routing

- With the 3.7 kW High Frequency router module, processing speed on rigid materials has never been higher.
- The automatic brush aligns itself to the material thickness, clearing debris without operator input and preventing table damage.
- Clean routing paths keep speed consistent without stopping to correct waste buildup.

Changeover

- Action Sets trigger full job sequences with a single click, operators simply place the next material and run.
- The machine sets itself up automatically for the next job in no time.

Designed to solve your everyday production challenges

When we designed the F Series, we didn't start from features. We started from the problems we kept seeing on production floors worldwide.

Bart Somers
Mechanical Development Manager

1

Imagine - Your new operator is up and running the same morning

Finding skilled operators is harder than ever, and training shouldn't stand in the way of throughput. With the F Series Vantage, most day to day cutting work can be learned in under two hours thanks to intuitive software,one click workflows, and a suite of hardware automations that remove judgment calls from setup.

2

Imagine - No more blade breaks

An ideal workflow is one where you never break a blade and always keep momentum. Automatic Device Calibration, or ADC, is made for this task exactly. The machine performs a full 3D check of blade origin, lateral alignment, and depth before the job begins. Blade types are recognized automatically, so operators never run the wrong blade on the wrong material. It's consistency without second-guessing.

3

Imagine - Seamless job switching

Between jobs, minutes disappear. With the F Series Vantage, a single action button becomes the job's entire checklist. The operator switches the material, hits the assigned workflow, and everything else happens automatically. No hunting for settings. No manual resets. Just predictable changeovers, shift after shift.

4

Imagine - Always cutting the right file

Barcode errors and manual file selection create avoidable waste. The new ethernet connected camera reads Summa's POSTNET barcodes instantly and loads the right file, settings, and material profile without operator input. The system knows what to cut before the operator touches a button.

5

Imagine - Instant module recognition

Modules define pressure, movement, and the type of cut, and mixing them up leads to costly errors. New module IDs remove that risk completely. The machine scans each module, recognizes it instantly, and calibrates it to perfection, no matter where it's placed on the head.

6

Imagine - Safety without interruptions

On busy floors, the temptation to 'just get it done' is real. The risk is, too. The F Series Vantage safety concept is engineered to be non-negotiable and designed so it cannot be bypassed in normal operation. However, safety interruptions don't mean a total reset. Operation can be resumed in seconds, so operators stay protected and production stays compliant.

Open & modular

Open by design

Your workflow is unique. Your tools, your RIPs, your printers, your automation partners; they were chosen for a reason. The F Series Vantage respects that. It fits into the environment you already trust, without lock-ins or hidden constraints. We don't create switching costs, no matter the setup.

The platform connects to **any printer, any RIP** (with more than 50 supported), and **any finishing or handling solution** you rely on today. We are open and will never push any third party onto you. If it's in your workflow, we intend to integrate with it. Ethernet connectivity ensures you can place the machine and workstation where your production needs them, even in controlled clean room spaces.

Everything about the Summa ecosystem is built to work with you, not confine you.
A system that integrates smoothly becomes a system you can grow with.

GO PRODUCE

GoProduce
your entire operation in one app

GoProduce is where the operator meets the machine and where the F Series Vantage earns its reputation for being intuitive, steady and collaborative. The integrated software is your one-stop-shop the second your material is printed, making your ecosystem as simple as can be.

- Unlimited adaptable **Action Sets** reduce entire job sequences to one click in tune with every workflow, keeping results consistent, no matter the operator.
- **Material Manager** stores validated profiles so every job starts right, regardless of who is running it or on how many machines. Create an XML-file and share it across your flatbed collection.
- **Barcode automation** removes file selection guesswork and ensures the machine loads the correct job with the correct settings every time, no matter how you place your material.

GoProduce is designed for fast onboarding and clear feedback. It shortens learning curves and reduces the pressure on skilled operators, a necessity in today's production environment.

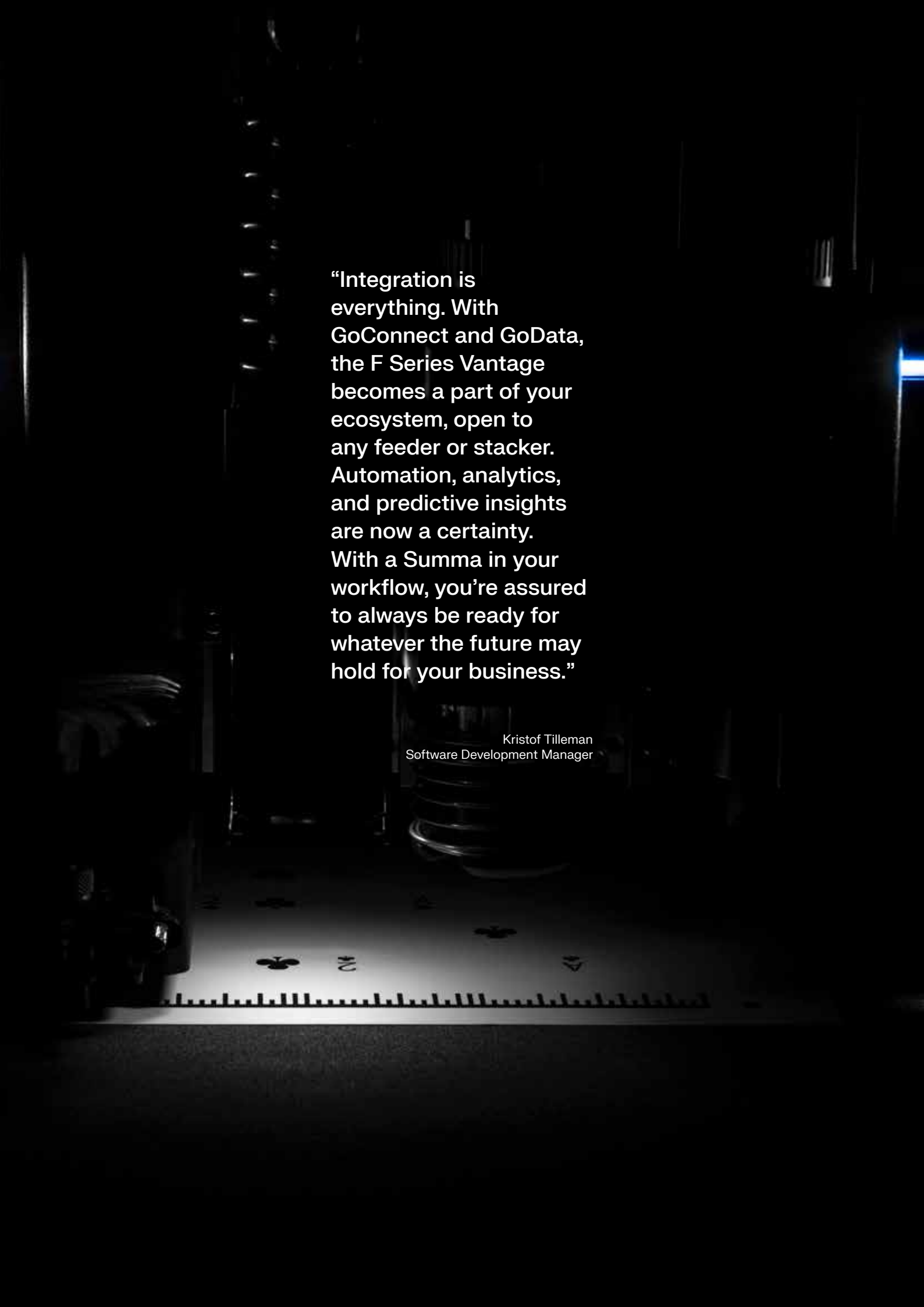

“Integration is everything. With GoConnect and GoData, the F Series Vantage becomes a part of your ecosystem, open to any feeder or stacker. Automation, analytics, and predictive insights are now a certainty. With a Summa in your workflow, you’re assured to always be ready for whatever the future may hold for your business.”

Kristof Tilleman
Software Development Manager

GoData - Real time insight you can act on

GoData shows what's happening on your production floor right now and what might happen next. It monitors the machine's output in real time, helping you identify bottlenecks and pinpoint inefficiencies before they escalate. It analyzes job data across shifts and materials, giving you a clear view of performance trends and machine utilization.

Thanks to its open API, you can connect the data to your own analysis environment and dashboards, giving you insights in planning, production, material use, machine efficiency and strategic vision.

With every job logged and visualized, GoData becomes a quiet decision making tool, one that helps you understand when to optimize, when to scale, and where your production truly spends its time.

GoConnect - The bridge

GoConnect links the F Series Vantage to your wider production environment. ERP systems, third party automation, feeders, security platforms; everything communicates cleanly.

It turns your flatbed into a connected component, ready for the workflows of tomorrow.

Ready for tomorrow

The Summa software platform is built for today's workflows and ready for the ones that will define tomorrow. Our architecture anticipates the role of AI-driven automation, robotic handling and data-powered production environments.

Open protocols allow for new integrations without overhauls. Software evolves continuously without locking you in.

As your production sharpens and your imagination widens, Summa's cutting machines are ready to grow with you. This isn't a vague promise, it's what makes us who we are.

F1612

The smart flatbed for teams that need precision, flexibility, and a footprint that fits anywhere.

Full performance for small footprints

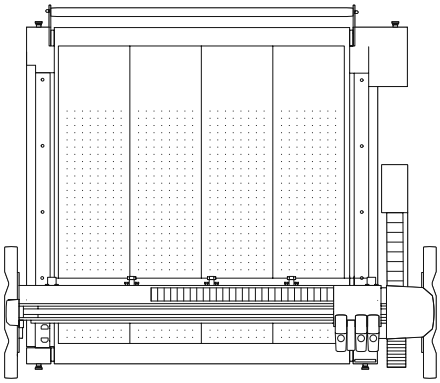

Who it's built for

The F1612 is made for growing businesses that need a reliable way to cut vinyl, banners, stickers, magnetic media, and light board materials, without giving up space on the production floor. It's the compact workhorse for teams handling mostly flexible materials up to 165 cm / 65 inch wide.

Why choose the F1612

- Fits in tight spaces without sacrificing capability. Perfect for compact production floors and growing business environments.
- Handles the full daily mix: adhesive vinyl, banner, reflective, laminate stacks, and sheet materials in the 165 cm / 65 inch category.
- Conveyor workflow, roll support, clamps and standard camera included. Set up for roll and sheet work from day one.
- Plug and play installation with integrated safety and a future ready design that grows with your business.

DIMENSIONS	247 x 220 x 110 cm / 97 x 87 x 43 inch
MATERIAL WIDTH	Up to 165 cm / 65 inch
WORK ZONE	160 x 120 cm / 63 x 47 inch
VACUUM	1.3 kW (50Hz) / 1.75 kW (60Hz)
VACUUM ZONES	4 zones (1 row, 4 columns)
SPEED	Up to 1000mm/sec / 39 inch/sec
ACCELERATION	Up to 1G
REQUIREMENTS	Standard: 3 x 400V + N, 50Hz, max 20A
	Or: 3 x 208V + N, 60Hz, max 30A
	Or: 3 x 230V, 50Hz, max 20A
	Or: 3 x 400V + N, 60Hz, max 20A
	Or: 1P 240V + N 30A (US Only)

IDEAL TO CUT:

STICKERS
REFLECTIVE MATERIALS
SOFT SIGNAGE
MAGNETIC SHEETS
DECALS

F1625

The go to model for businesses that want to run everything: rolls, sheets, rigid boards, and routed materials.

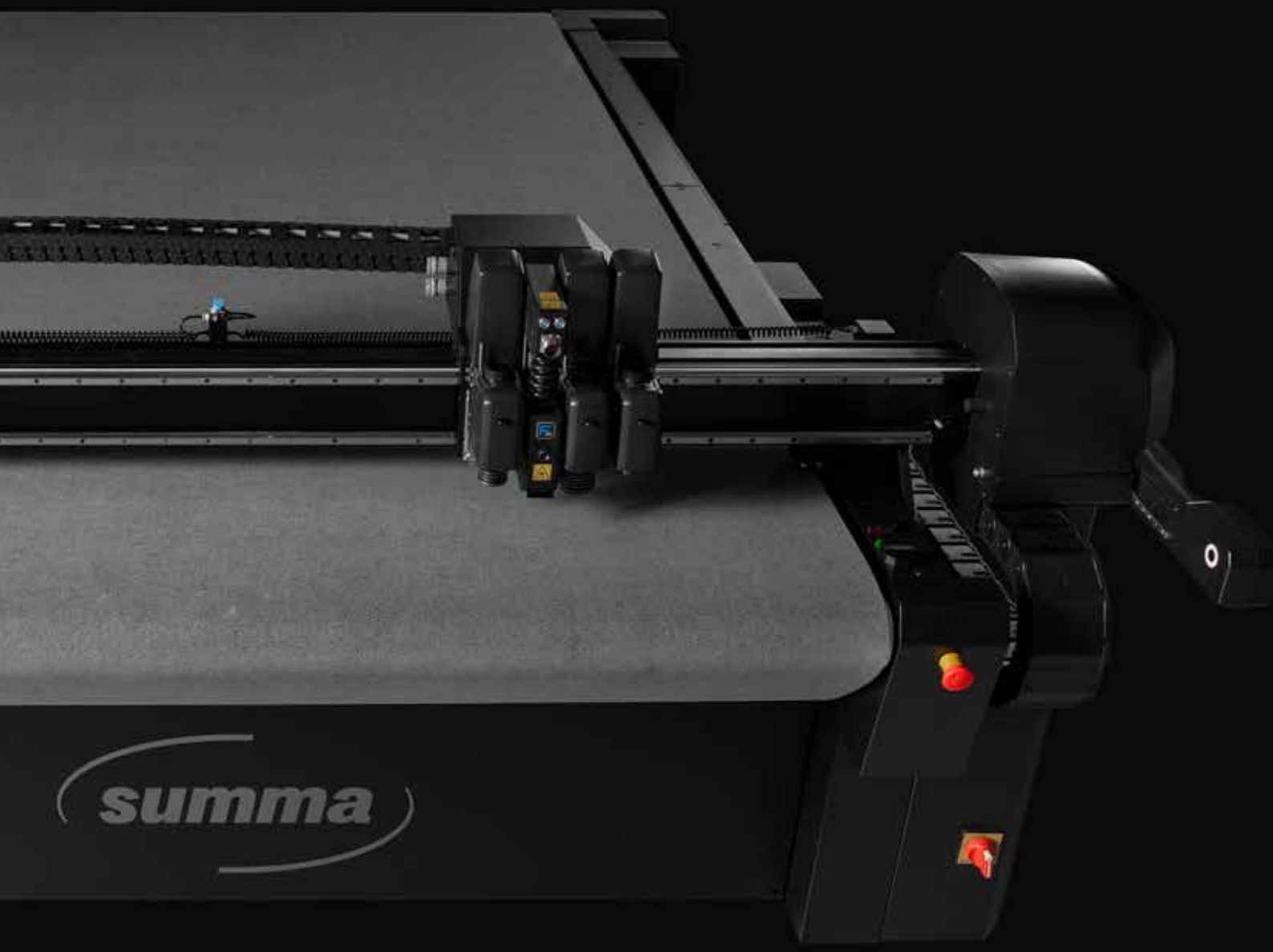

The most versatile production table

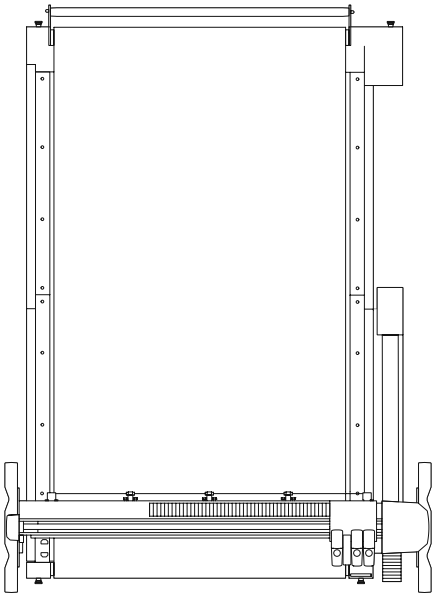

Who it's built for

The F1625 is the all-purpose flatbed for sign & display, industrial, packaging and textile professionals who need a table that handles both flexible media, specialty media and full 4×8 ft sheets (122x244 cm). It's the perfect choice for teams ready to take on routing, creasing, prototyping, POS work, and short run packaging, all on one platform.

Why choose the F1625

- The sweet spot for operators that want "one table that does it all."
- Cuts vinyl, banners, foam boards, corrugated, PVC up to 5 mm, plywood, MDF, ACM, aluminum sandwich panels, acrylic, felt, and more.
- Designed around sheet workflows: perfect dimensions for 122 x 244 cm / 4 × 8 ft boards.
- Tandem mode and operator zone minimize waiting time, ideal for daily high mix, high value production.
- Same future proof modularity as all F models, with full routing, creasing, kiss cutting, and tooling support.

DIMENSIONS	247 x 330 x 110 cm / 97 x 130 x 43 inch
MATERIAL WIDTH	Up to 165 cm / 65 inch
WORK ZONE	160 x 250 cm / 63 x 98 inch
VACUUM	2x 1.3 kW (50Hz) / 2x 2 kW (60Hz)
VACUUM ZONES	8 zones (2 rows, 4 columns)
SPEED	Up to 1000 mm/sec / 39 inch/sec
ACCELERATION	Up to 1G
REQUIREMENTS	Standard: 3 x 400V + N, 50Hz, max 20A
	Or: 3 x 208V + N, 60Hz, max 30A
	Or: 3 x 230V, 50Hz, max 20A
	Or: 3 x 400V + N, 60Hz, max 20A

IDEAL TO CUT:

4 X 8 FT RIGID BOARD
EXPANDED PVC/FOAMBOARD
HONEYCOMB & REBOARD
MULT-PLY PLYWOOD
ACM/ACP
ACRYLIC/PMMA
ALUMINUM
BANNERS
REFLECTIVE SHEETING
MAGNETIC MEDIA

Modules & Tools

Fewer switches, more flow

The F Series Vantage head carries up to three modules at once, giving operators everything they need already on the machine, with the liberty to place every module where it suits you best. Complex jobs run without interruption. Everyday work becomes predictable.

The result is simple: you spend less time changing tools and more time producing the work your customers are waiting for.

With the new fast module, accompanying the already existing tangential module, you have 2 clear options to tackle the type of jobs you need to execute with precision and speed.

NEW

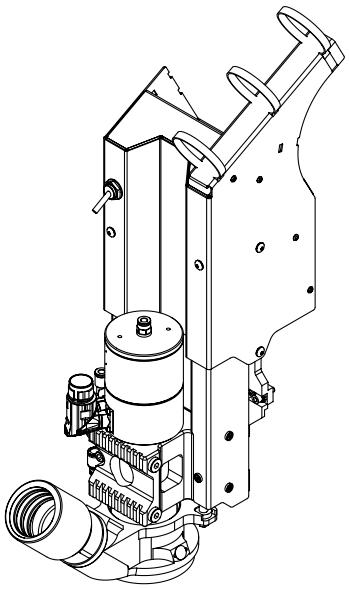

3.7 kW HF router module

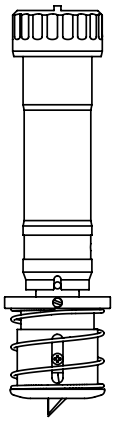

Rigid material cutout tool

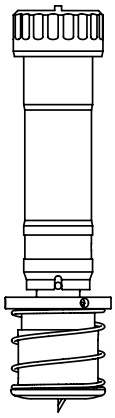

High precision cutout tool

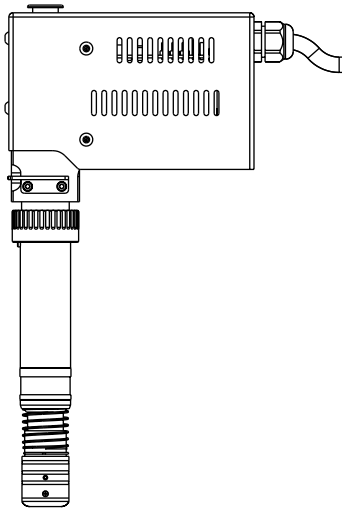

Power-EOT

Versatile modules

One module for a wide range of tools with easy and quick tool switching.

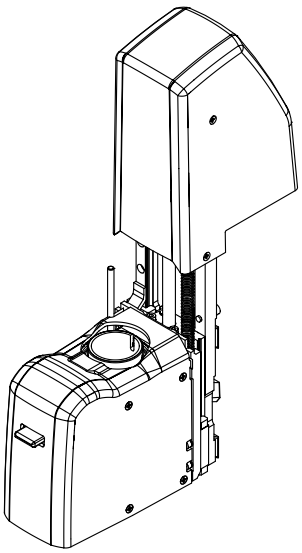

Fast+ module
Built for speed in detailed work.
The fast module accelerates the vertical Z movement, the most time consuming motion in complex cutting. Every up down cycle becomes quicker, giving a measurable advantage on intricate designs, packaging outlines, and multi step production jobs. Perfect for light board materials, flexible substrates, and high detail shapes.

Accelerated vertical Z-movement to significantly increase cutting speed, perfect for light board, flexible substrates and high-detail shapes.

FAST+
MODULE

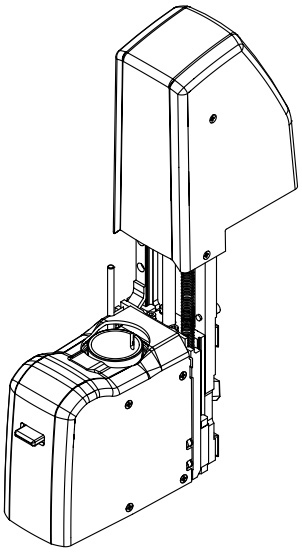

Core+ module
The all-round precision module.
With high downforce and support for the widest range of tools, the tangential module handles everything from kiss cutting to creasing, V cutting, heavy cutout work, and oscillating blades for thick materials.
It is the versatile choice for mixed production environments.

A flexible workhorse with high downforce that supports the widest range of tools.

CORE+
MODULE

Single Tool modules

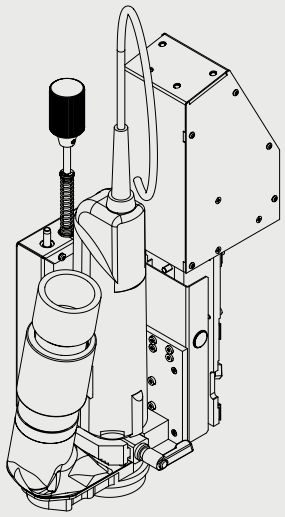

Standard router module
1.4 kW routing for rigid signage, display fabrication, and industrial components.

Delivers smooth edges and clean finishes on materials such as foam PVC, MDF, acrylic, ACP/ ACM, and polycarbonate.

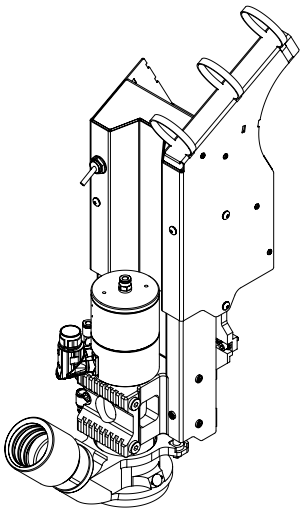

3.7 kW HF router module
A high production router with up to 60,000 RPM making it twice as fast as the standard router.

Perfect for demanding rigid materials and applications where edge quality and cutting speed are equally important.

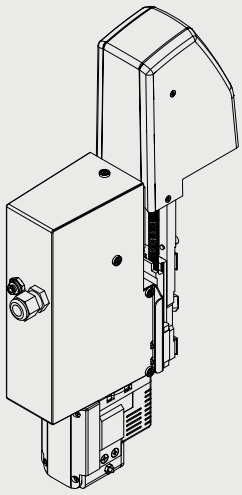

Rotary knife module
Built for the toughest textiles with a decagonal blade.

Keep your material in place thanks to the minimal horizontal force of the rotary blade, resulting in minimal drag and reliable cuts.

ROTARY KNIFE
MODULE

Drag module - *Included with every model.*
Fast, precise kiss cutting and plotting with generous downforce, ideal for adhesive vinyl, window film, sandblast materials, and detailed drawing work.

DRAG
MODULE

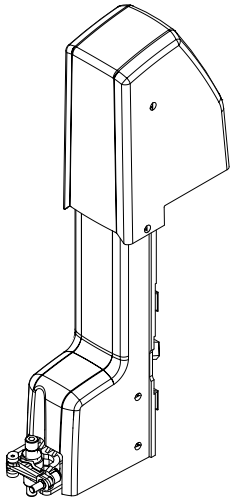

A tool for every job

Every job follows the same simple logic: the module determines the movement, the tool determines the cut, and the software ensures the right pairing every time.

Each module brings its own strengths — speed, precision, or torque — and every tool is optimized for a specific class of materials. Automatic tool recognition removes guesswork, loading the correct settings immediately.

This creates a system that adapts as your production evolves. Start with the essentials. Add modules and tools over time. The platform grows naturally with your workflow, your customers, and your ambitions.

Featured tools

Rigid Material Cutout tool
The new standard.
Cuts up to 8 mm foam PVC with clean, consistent results. For many shops, this single tool replaces a series of specialty blades, dramatically reducing tool swaps.

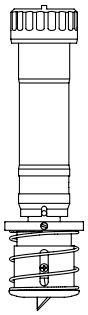

High Precision Cutout tool
For fine detail on lighter materials. A refined blade designed for precision finishing on thinner substrates, delivering sharp detail with minimal distortion.

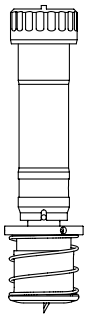

Corrugated tool
Fast, quiet, die cut like results. Cuts corrugated materials up to 8 mm without oscillation; eliminating dust, reducing noise, and preventing conveyor wear.

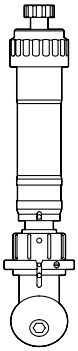

Power-EOT
A more powerful plug-and-play oscillating cutting tool that is ideal for rubber, foams, mousses & honeycombs boards up until 16mm.

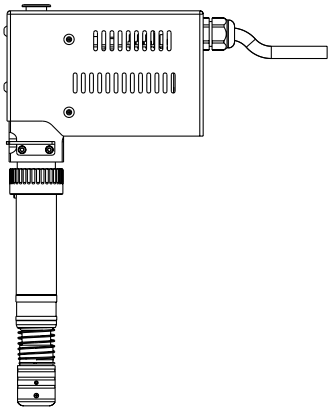

A complete line-up

- **RIGID MATERIAL CUTOUT TOOL:** Cuts up to 8mm thick rigid materials **[NEW]**
- **HIGH PRECISION CUTOUT TOOL:** For fine details on up to 6mm thick material **[NEW]**
- **CORRUGATED TOOL:** For corrugated materials up to 8mm / 0.3” without oscillation
- **SINGLE EDGE CUTOUT TOOL:** Cut flexible and rigid media up to 6mm
- **DOUBLE EDGE CUTOUT TOOL:** Cut rigid media up to 5mm / 0.19”
- **HEAVY DUTY CUTOUT TOOL:** Cut dense media up to 15mm / 0.59”
- **KISS-CUT TOOL:** Kiss-cut complex shapes
- **CREASING TOOL:** Crease at various depths
- **V-CUT TOOL:** Cut angles (0°-45°) in rigid media up to 27mm / 1.06”
- **PERFORATING TOOL:** Perforate both thin and thick media
- **EOT (ELECTRONIC OSCILLATING TOOL):** Cut soft to medium-dense materials up to 18mm / 0.7”
- **POT (PNEUMATIC OSCILLATING TOOL):** Cut thick media up to 25mm / 0.98”
- **POT-L (PNEUMATIC OSCILLATING TOOL-L):** Cut thick and soft media from 20-42mm / 0.78”-1.65”
- **BEVEL CUT TOOL:** Cut V-shaped grooves at 45° up to 5mm / 0.19”

Tool application overview

RECOMMENDED

ALTERNATIVE

	Drag Module	Standard Routing Module	3.7kW High Frequency Router Module	Rotary knife module	Rigid Material Cutout tool	High Precisionl Cutout tool	Kiss-Cut Tool	Single Edge Cut-out Tool	Bevel Cut Tool	Double Edge Cutout Tool	Heavy Duty Cut-out Tool	Corrugated Tool	EOT	POT	POT-L
					Fast+ Tangential Module										
PAPER-BASED MATERIALS															
PAPER < 200 GSM															
FOLDING CARTON 300-500 GSM															
CORRUGATED SINGLE FLUTE 1-4 MM															
CORRRUGATED DOUBLE FLUTE 4-8 MM															
HONEYCOMB BOARD < 10 MM															
HONEYCOMB BOARD ≥ 10 MM															*
COMPOSITES															
FOAMCORE WITH PAPER LINER															
FOAMCORE WITH HIPS LINER															
FOAMCORE WITH PVC LINER															
ACP/ACM															
SYNTHETIC MATERIALS															
CORRUGATED PP BOARD ≤ 8 MM															
CORRUGATED PP BOARD > 8 MM															*
EXPANDED PVC BOARD ≤ 5 MM															
EXPANDED PVC BOARD ≤ 8 MM															
EXPANDED PVC BOARD > 8 MM															
POLYPROPYLENE SHEETS ≤ 1,2 MM															
POLYCARBONATE ≤ 0,6 MM															
POLYCARBONATE > 1 MM															
PLEXI															
PET < 1,2 MM															
PET < 2 MM															
ROLL MATERIALS															
ADHESIVE VINYL															
BANNER															
PROTECTIVE SHEETING															
REFLECTIVE SHEETING															
MAGNETIC															
WOOD															
MDF															
PLYWOOD															
NATURAL HARDWOOD															
TEXTILES															
WOVEN POLYESTER															
LAMINATED FABRICS															
CANVAS															
INDUSTRIAL MATERIALS															
VARNISH BLANKETS															
GASKET															
INSULATION FOAM															*
RUBBER															*

** min. thickness 20 mm*

	Perforating tool	V Cut Tool 0	V Cut Tool 15	V Cut Tool 22,5	V Cut Tool 30	Vcut Tool 45	"Creasing Tool D25 R3 W8"	"Creasing Tool D25 R1,5 W8"	"Creasing Tool D25 R0,75 W1,5"	"Creasing Tool D15 R0,35 W0,7"	"Creasing Tool D15 R0,17 W0,35"	"Creasing Tool D50 R1,5 "
	Core+ Tangential Module											
PAPER-BASED MATERIALS												
PAPER < 200 GSM												
FOLDING CARTON 300-500 GSM												
CORRUGATED SINGLE FLUTE 1-4 MM												
CORRRUGATED DOUBLE FLUTE 4-8 MM												
HONEYCOMB BOARD < 10 MM												
HONEYCOMB BOARD ≥ 10 MM												
COMPOSITES												
FOAMCORE WITH PAPER LINER												
FOAMCORE WITH HIPS LINER												
FOAMCORE WITH PVC LINER												
ACP/ACM												
SYNTHETIC MATERIALS												
CORRUGATED PP BOARD ≤ 8 MM												
CORRUGATED PP BOARD > 8 MM												
EXPANDED PVC BOARD ≤ 5 MM												
EXPANDED PVC BOARD ≤ 8 MM												
EXPANDED PVC BOARD > 8 MM												
POLYPROPYLENE SHEETS ≤ 1,2 MM												
POLYCARBONATE ≤ 0,6 MM												
POLYCARBONATE > 1 MM												
PLEXI												
PET < 1,2 MM												
PET < 2 MM												
ROLL MATERIALS												
ADHESIVE VINYL												
BANNER												
PROTECTIVE SHEETING												
REFLECTIVE SHEETING												
MAGNETIC												
WOOD												
MDF												
PLYWOOD												
NATURAL HARDWOOD												
TEXTILES												
WOVEN POLYESTER												
LAMINATED FABRICS												
CANVAS												
INDUSTRIAL MATERIALS												
VARNISH BLANKETS												
GASKET												
INSULATION FOAM												
RUBBER												
	** min. thickness 20 mm min.*											

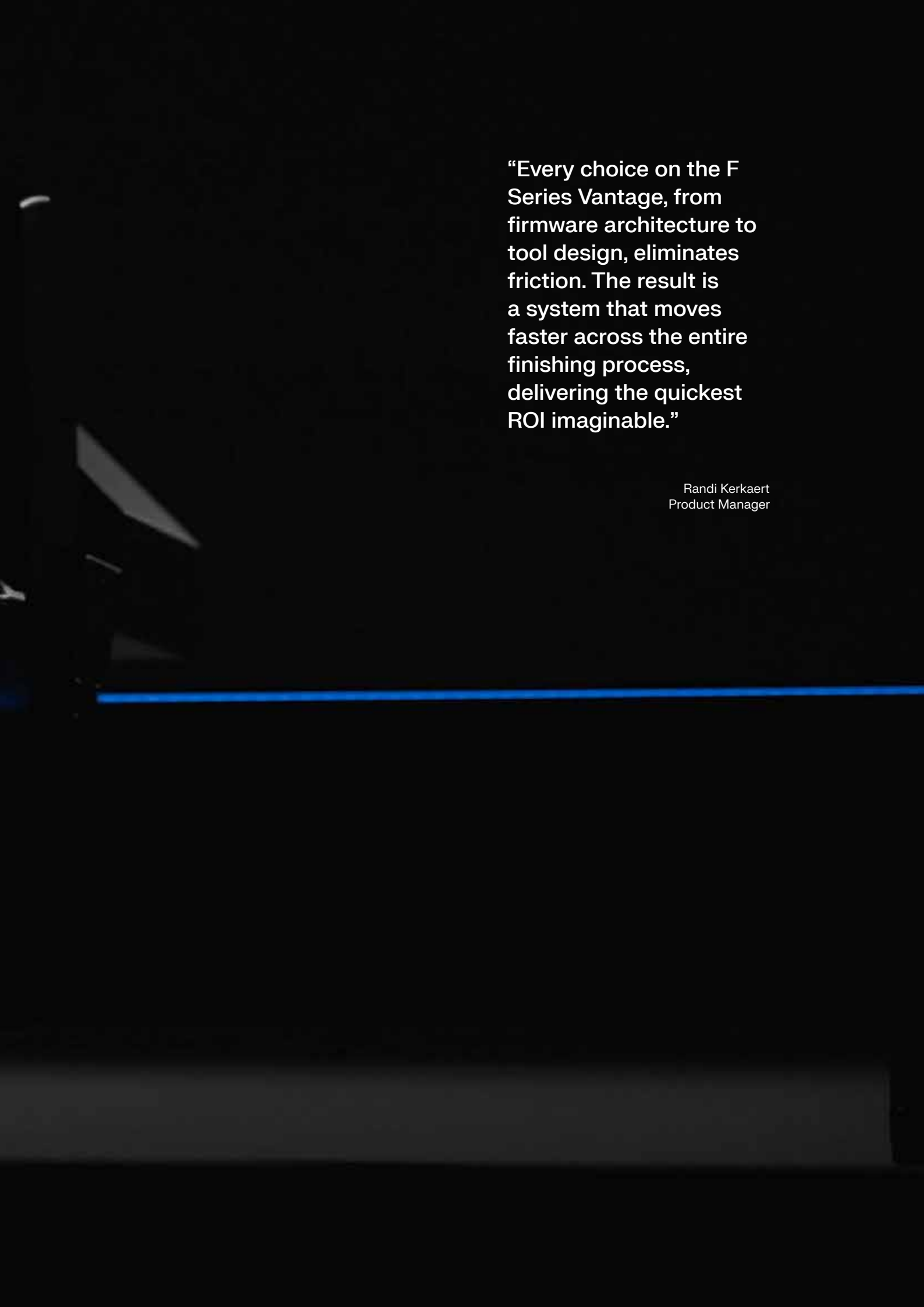

“Every choice on the F Series Vantage, from firmware architecture to tool design, eliminates friction. The result is a system that moves faster across the entire finishing process, delivering the quickest ROI imaginable.”

Randi Kerkaert
Product Manager

Built for your goals

The F Series Vantage line isn't designed for a single market. It's built to adapt to the realities of signage, packaging, textile, and industrial production, where materials change, deadlines shift, and precision can never slip.

Each industry has its own challenges, and the Vantage is shaped to meet them with confidence.

Different industries. Different materials. One finishing system that keeps them all moving.

Signage & Display

Fast turnarounds, varied materials, and constant pressure on consistency. The F Series Vantage handles everything from vinyl and banners to rigid boards with the same steady accuracy. Complex contours stay clean. Long runs stay predictable. Whether you're producing window decals, POS displays, or traffic signs, the workflow stays smooth and repeatable.

Industrial

In industrial environments, reliability is non negotiable. The F Series Vantage line is built to process dense materials, technical laminates, engineered composites, and thicker substrates like aluminum, ACM and PVC with confidence. From gaskets and insulation to complex components cut from rigid panels, the system maintains predictable performance job after job.

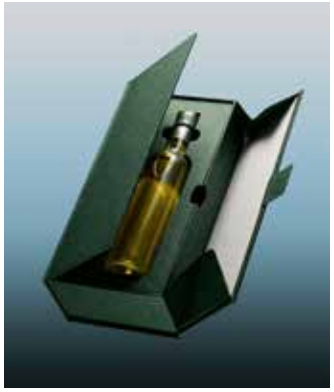

Packaging

Packaging requires structural accuracy, crisp creases, and the flexibility to move between prototypes and short production runs without losing time. The Vantage delivers consistent scoring, cutouts, and V cuts across folding carton, corrugated board, and specialty composites. You get clean edges, tight tolerances, and a workflow that handles both creative packaging and repeatable production.

Textile

Textile work demands control: stable cuts on porous or stretch prone materials, clean edges, and workflows that remain reliable even on high volumes. The F Series Vantage system supports fast, precise textile cutting with tools and modules designed to reduce drag, distortion, and handling errors. From sportswear and flags to soft signage, the results stay sharp.

Order Codes - consumables

DRAG MODULE	
391-231	Drag knife 60'
391-358	Drag knife 55'
391-363	Drag knife holder (copper) for sandblast knives #391-358
395-430	Roller ball black (5 pieces)
395-434	Universal penholders (2 types) for drag head
395-438	Fiber pen black (5 pieces)
9TL89-67033	Standard drag knife holder
9TL89-67041	Standard drag knife 36'
TANGENTIAL MODULES – BLADES	
390-534	Standard tangential knife 36' (5x)
390-550	Tangential knife 60' sandblast
390-551	Tangential double tip knife 36'
390-560	Tangential knife 45°, wedge 40/25°
395-348	Nose piece, standard
500-3318	Depth adjust kisscut knife holder
390-553	Tangential knife install tool
ELECTRONIC OSCILLATING TOOL / EOT	
500-9800	Knife OT L25 65°
500-9810	Knife OT L25 / 65°-80°
500-9811	Knife OT L25 / 65°-85°
500-9812	Knife OT L28 / 65°-85°
500-9813	Knife OT L25 / 0°-65°
500-9814	Knife OT L38 / 45°-86°
500-9815	Knife OT L33 / 45°-85°
SINGLE EDGE CUTOUT TOOL	
500-9801	Single edge cutout knife 65°
DOUBLE EDGE CUTOUT TOOL	
500-9802	Double edge cutout knife 50°
500-9803	Double edge cutout knife 60°
500-9804	Double edge cutout knife 50° burr-free (2x)
HEAVY DUTY CUTOUT TOOL	
500-9807	Heavy duty cutout knife 45°/90°
V-Cut tools	
500-9825	V-Cut blade 0.9mm (5x)
500-9826	V-Cut blade hard metal
Bevel cut tool	
500-9827	Burr-free BevelCut knife
500-9829	Symmetrical BevelCut knife
PNEUMATIC OSCILLATING TOOL / POT / POT-L	
500-9894	POT knife flat L44.5 CL20 T0.7
500-9895	POT knife flat point L51 CL27
500-9896	POT knife serrated L49.5 CL27
500-9897	POT knife pointed L44.5 CL20 T0.8
500-9898	POT knife flat L44.5 CL20 T1.5
500-0140	1 set of foam seals for POT Mk2
500-9835	POT-L knife L50 T1.0 (3X)
500-9830	POT knife flat point L20 T0.63 (X3)
500-9831	POT knife flat point L27 T0.63 (3X)
500-9832	POT knife flat point L20 T1.5 (3X)
500-9833	POT knife serrated flat point L27 T1 (X3)
500-9834	POT knife L20 T1 (3X)
PERFORATING TOOL	
500-9890	Perforation knife 1X1 mm D1.1 mm (12TPI)
500-9891	Perforation knife 1.7X1.7 mm D1.1 mm (8TPI)
500-9892	Perforation knife 3X3 mm D4 mm (4TPI)
500-9893	Perforation knife 5X5 mm D4 mm (3PTI)
Corrugated tool	
500-9820	50° Symmetrical Coated knife up to 5 mm
500-9821	65° Symmetrical Coated knife up to 8 mm
ROTARY KNIFE MODULE	
500-9860	Decagonal knife D25 (3X)
500-9861	Decagonal knife D28 (3X)
500-9862	Decagonal knife D32 (3X)

ROUTING SYSTEM	
500-0355	3MM Collet for 1400 FME
500-0356	4MM Collet for 1400 FME
500-0357	6MM Collet for 1400 FME
500-0358	6-35MM Collet for 1400 FME-P
500-0359	8MM Collet for 1400 FME-P
500-9850	BIT D3/3 L38/11 1FL UC MP (3X)
500-9852	BIT D4/4 L50/12 1FL UC MP (3X)
500-9872	BIT D3/3 L38/6 1FL UC MP (3X)
500-9873	BIT D4/4 L50/6 1FL UC MP (3X)
500-9874	BIT D4/4 L50/14 1FL UC MP (3X)
500-9854	BIT D6/3 L50/06 1FL UC MP (3X)
500-9856	BIT D6/4 L50/12 1FL UC MP (3X)
500-9857	BIT D6/6 L50/12 1FL UC BAL MP (3X)
500-9858	BIT D6/6 L58/22 1FL UC BAL MP (3X)
500-9863	BIT D6/10 L50/6 V GROOVE 2FL 90° (2X)
500-9864	BIT D6/6 L50/22 2FL UC/DC (2X)
500-9865	BIT D6/6 L50/12 1FL UC BAL CT (3X)
500-9866	BIT D6/3 L50/11 1FL DC MP (3X)
500-9867	BIT D6/3 L50/6 1FL UC CT MP (3X)
500-9868	BIT D6/4 L50/12 1FL UC CT MP (3X)
500-9869	BIT D6/2 L50/6 1FL UC CT MP (3X)
500-9870	BIT D6/4 L50/6 1FL UC CT MP (3X)
500-9875	BIT D6/2 L50/6 1FL UC MP (3X)
500-9876	BIT D6/3 L50/11 1FL UC MP (3X)
500-9877	BIT D6/4 L50/6 1FL UC MP (3X)
500-9878	BIT D6/6 L50/12 1FL UC MP (3X)
500-9879	BIT D6/3 L50/6 1FL DC MP (3X)
500-9880	BIT D6/4 L50/12 1FL DC MP (3X)
500-9881	BIT D6/6 L50/12 1FL DC MP (3X)
500-9882	BIT D6/2 L50/6 1FL UC A (3X)
500-9883	BIT D6/3 L50/6 1FL UC A (3X)
500-9884	BIT D6/3 L50/11 1FL UC A (3X)
500-9885	BIT D6/4 L50/8 1FL UC A (3X)
500-9886	BIT D6/4 L50/12 1FL UC A (3X)
500-9887	BIT D6/6 L50/12 1FL UC BAL A (3X)
500-9888	BIT D6/6 L58/22 1FL UC BAL A (3X)
500-9889	D6/4 L60/14 1FL UC DLC (1x)
500-9859	D6/6 L50/14 Polishing
ACCESSORIES	
1NC40-67034	set of 2 3" core holders for 6.5" (16.5CM) roll diameter
500-0312S	POT brass guiding
500-1255	cam bellow
500-1302	tool wrench
500-3313	knife guide Electronic Oscillating Tool
500-3315S	uni gliding disc SGL/DBL knife
500-3325	knife mount tool V-cut packed
KIT-5051	Barcode labels Kit
500-9225	tilt fixture F1612
500-9364	replacement milling motor 1400W
500-9828	gliding disc Bevelcut
KIT-5109	Router extractor brushes

ORDER CODES: HARDWARE	
F16XX MEDIA HANDLING ADD-ONS	
500-9425	Sheet Feed 75 for F16XX Bundle
500-9422	Leveling kit for use with F16XX & Board Feeders
500-9416	Heavy-Duty Roll Support for F16XX
500-9140	Conveyor front Extension F16XX
500-9122	Roll-up for F16XX
500-9426	BASKET F16XX
500-9121	Sturdy folding extension table
ALL F SERIES MODULES	
500-9560	Drag Module
500-9561	Core+ Module
500-9562	Fast+ Module
500-9563	Rotary Module
500-9541	Standard Router System for F Series Vantage
500-9542	Standard Router System for F1625 Vantage
500-9545	3.7 kW HF Router System for F1612 Vantage
500-9546	3.7 kW HF Router System for F1625 Vantage
ALL F SERIES TOOLS FOR TANGENTIAL MODULES	
500-9311	Kiss cutting tool
500-9312	Single edge cutout tool
500-9313	Double edge cutout tool
500-9314	Heavy duty cutout tool
500-9315	Perforating tool
500-9316	Bevel cut tool
500-9317	High precision cutout tool
500-9318	Rigid material cutout tool
500-9320	Electronic oscillating tool
500-9321	Corrugated tool
500-9366	Pneumatic oscillating tool Mk2 (POT)
500-9367	Pneumatic oscillating tool Long MK2 (POT-L)
500-9324	Crease tool D50 R1.5 H0.6
500-9325	Creasing tool D25 R3 W8 H7
500-9326	Creasing tool D25 R1.5 W8 H5.5
500-9327	Creasing tool D25 R0.75 W1.5 H1.5
500-9328	Creasing tool D15 R0.35 W0.7 H1 – 2PT
500-9329	Creasing tool D15 H1.5 – 1PT
500-9340	V-Cut tool 0°
500-9341	V-Cut tool 15°
500-9342	V-Cut tool 22.5°
500-9343	V-Cut tool 30°
500-9344	V-Cut tool 45°
ALL F SERIES MATS & BELTS	
500-9114	Conveyor belt kit for F1612
500-9115	Protective mat for F1612
500-9118	Conveyor belt kit for extendedF1612
500-9134	Conveyor belt kit F1625
500-9137	Protective mat F1625
500-9153	Conveyor belt kit for F2630
500-9154	Protective mats for F2630
500-9163	Conveyor belt kit for F1330
500-9164	Protective mat for F1330
500-9181	Conveyor belt kit for F3232
500-9182	Conveyor belt kit for F3220
500-9189	Conveyor belt kit for F1432
500-9333	Routing mat (1.54m)
500-9336	Routing mat (1.3m)
500-9355	Conveyor belt kit for F1832
500-9356	Protective mats for F1832
ALL F SERIES ACCESSORIES	
500-9345	Hercules - 3000 W Vacuum cleaner

ORDER CODES: SOFTWARE	
ALL F SERIES SYSTEMS	
500-9511	Summa GoProduce base software
500-9517	Summa GoProduce (two major version update V1 to V3)
500-9515	Summa GoProduce (one major version update V2 to V3)
500-9514	Summa GoProduce - Dealer Version
500-9513	Summa GoProduce Pro Pack
500-9423	GoConnect

NOTES

At Summa, we believe imagination is powerful. But imagination, sharpened by precision, is unstoppable.

We design cutting solutions that set the pace. From next-generation roll and flatbed cutters to software so intuitive it turns complex ideas into finished work with a single click. No friction. No compromise. Just results that feel effortless and look extraordinary.

For us, innovation starts with listening. To the memory makers. The detail dressers. To those bridging the gap between good and perfect. Your challenges inspire our breakthroughs. Your ambition fuels our obsession with accuracy, speed, and reliability.

And yes, there's a little magic in what we do. That 'wow' moment when intention becomes outcome. When technology becomes the silent enabler of creativity. When tools don't just work, they work with you. Because Summa isn't just about machines or software.

It's about people, and what they can do. We're here to help you imagine what better looks like.

IMAGINATION, SHARPENED

summa

Sitotehnika

Jugoslovenska 2, 11250 Beograd
Tel: +381 11 6581274, 6581275
www.sitotehnika.net
office@sitotehnika.net

ST Graf

Aerodromska 17, 71000 Sarajevo, tel: +387 33 719095, 66 002600
Pilanska bb, 78000 Banja Luka, tel: +387 51 305280, 66 002400
Lagja Kalabria pn, 10000 Priština, tel: +383 38 602080, 45 600641

summa